The Bristol UAV Systems Conference 2009

The MoD Grand Challenge 2008: A Barnard Team Perspective

Dr Joseph Barnard
joseph.barnard@barnardmicrosystems.com

Barnard Microsystems Limited
134 Crouch Hill
London N8 9DX U.K.

The UK Mod Grand Challenge 2008.

The finale of the MoD Grand Challenge 2008 was held at Copehill Down Village from Saturday 9th August through to the presentation on Tuesday 19th August. Eleven Teams reached the finale, and participated in three pre-trial events:

Event 1: radio range check
Event 2: detect a vehicle on which a heavy gun has been mounted (a “technical”)
Event 3: detect a technical, an improvised explosive device and two snipers

Seven Teams made it to the proving events and participated in the final event. The Barnard Team was one of the Teams to make it to the final event, which was won by the Stellar Team.

BML helicopter in cross winds at the MoD Grand Challenge in 2008

The Barnard Team approach

Our approach was based on aerial surveillance, where we used Dewar's high flying CropCam motorised glider. Our helicopter control system was not sufficiently safe at the time to enable us to use our small helicopters in this event. Ken Lees and Marcel King set up the CropCam.

Aerial photography using the MicroPilot CropCam with Pentax compact camera

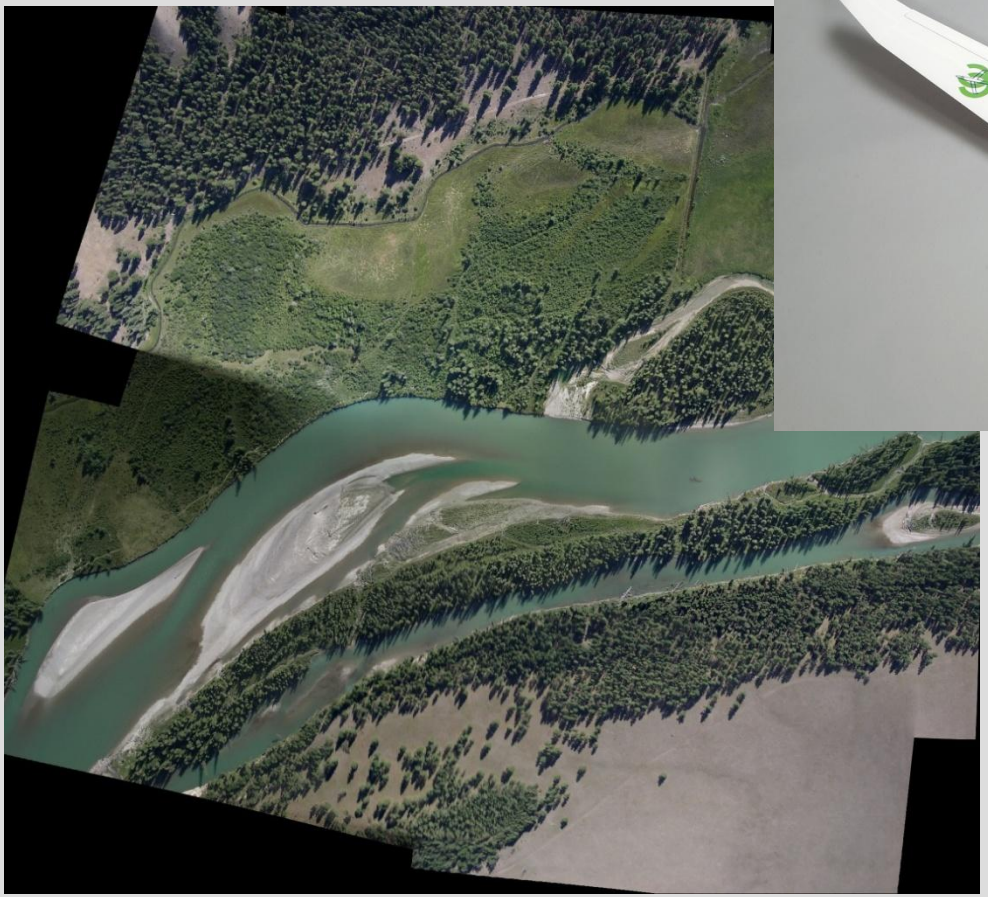

Image of 160 acres of land in British Columbia, derived from stitching together 12 separate images using the CropCam: from www.cropcam.com

Preparing the CropCam for flight from an area just outside of Copehill Down

The CropCam reconnaissance aircraft in flight...

Lessons learnt by the Barnard Team: Part 1

The unmanned aircraft and land vehicles need to be able to operate in gusty conditions and in a light rain.

Actual flight path, giving an indication of how gusty it was on the day

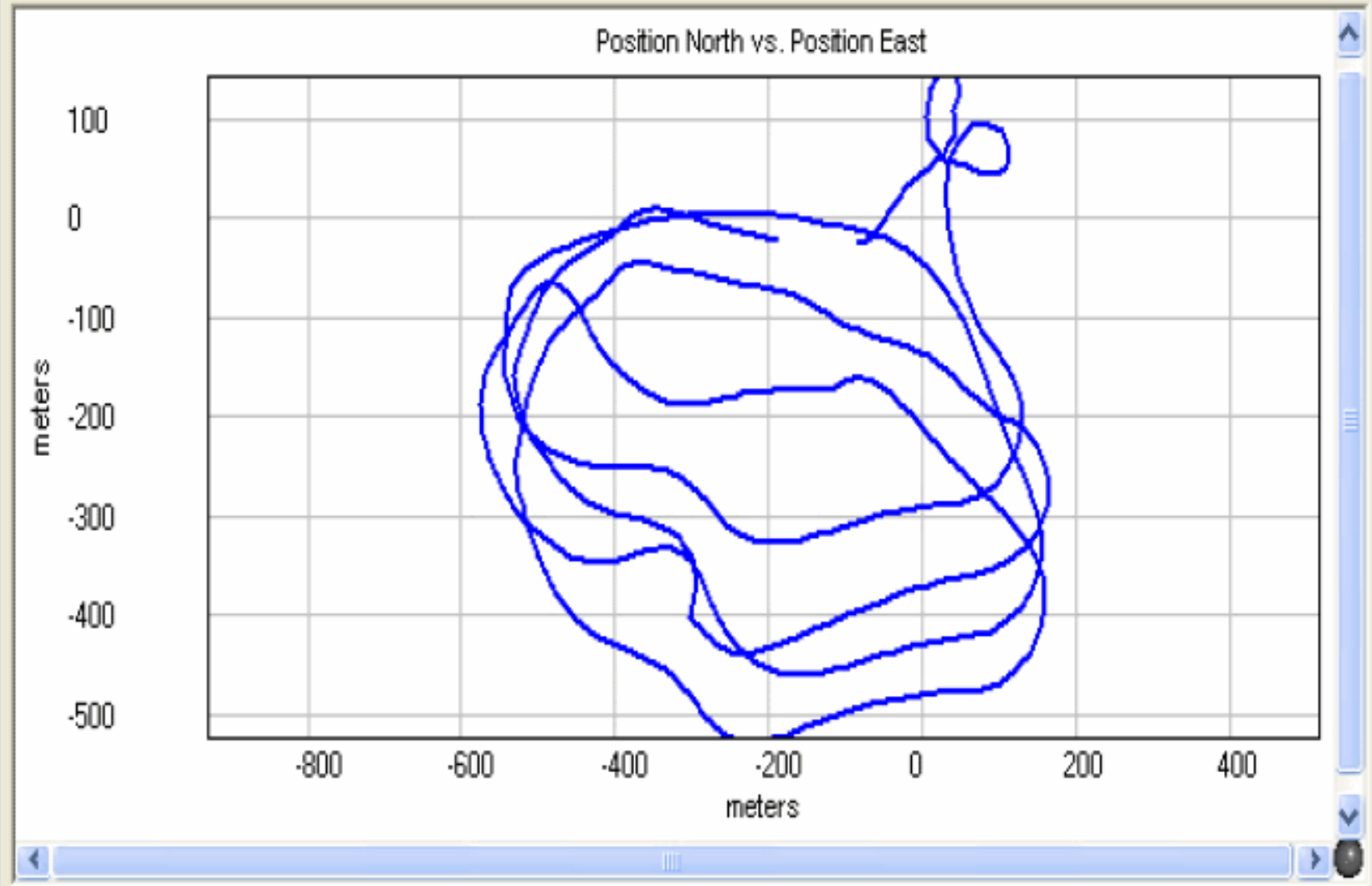

Lessons learnt by the Barnard Team: Part 2

The feedback of high bandwidth photographic data needs to be immediate.

All the Teams struggled with the communications links in an urban environment.

Communications and spectrum management are important components of an integrated, low latency, threat detection system.

Air-based surveillance must be complimented with an agile ground vehicle capability. The ground vehicles can detect IEDs placed under trees and in drainage pipes.

Lessons learnt by the Barnard Team: Part 3

It is very difficult for an unmanned aircraft to spot a bomb in a drainage pipe...

What were the benefits?

Exposure to reality. We found out just how difficult it is to get robotic vehicles to perform a useful task in adverse weather conditions.

We met many fellow competitors, some of whom we are now working with.

Understanding the key UK MoD priorities. A better understanding of the MoD priorities together with a chance meeting at the Grand Challenge resulted in subsequent MoD funded activities for BML.

Having been involved has **added to our credibility with the oil, gas and mineral exploration companies,** who have all encouraged us to gain more flight time with unmanned aircraft to enable us to reduce the insurance costs.

Subsequent work at Barnard Microsystems

Development of an unmanned, delta wing, aircraft that can fly in wet and windy conditions.

One big problem with small helicopters is their short flight times...

Align T-REX 600 electric helicopter: **11 minutes 30 secs** with a 600 g payload

One big problem with small helicopters is their short flight times...

Two stroke IC engine powered Thunder Tiger Raptor 50: **23 minutes 11 secs** with 600g payload

The “heavy lift” electric Minicopter Maxi Joker 3DD with a 9.4 kg payload

Images of the pre-release Minicopter Maxi Joker 3DD with flybar came to our attention. The Thales Team very effectively used the Maxi Joker 2 helicopter in the Grand Challenge 2008.

The flybarless electric Minicopter Maxi Joker 3DD which weighs 5.4 kg

Details of the sturdy Minicopter Maxi Joker 3DD with separate tail rotor motor

Minicopter Maxi Joker 3DD in a 30 mph crosswind near Brighton

Current development of a high performance, hybrid power, helicopter

- over 100 minutes hover time using 700 cc of AVGAS 100 LL

- up to 9.4 kg payload

- is relatively quiet due to use of effective mufflers in exhaust and in air intake and suppression of gear noise: rotor blade noise not tackled

- low payload vibration level of < 1g

- has electric start capability, with the starter motor also being able to generate power during flight

- using an electric motor powered by a 44.4V, 5,350 mAh LiPo battery and a twin cylinder, 30cc, four stroke engine

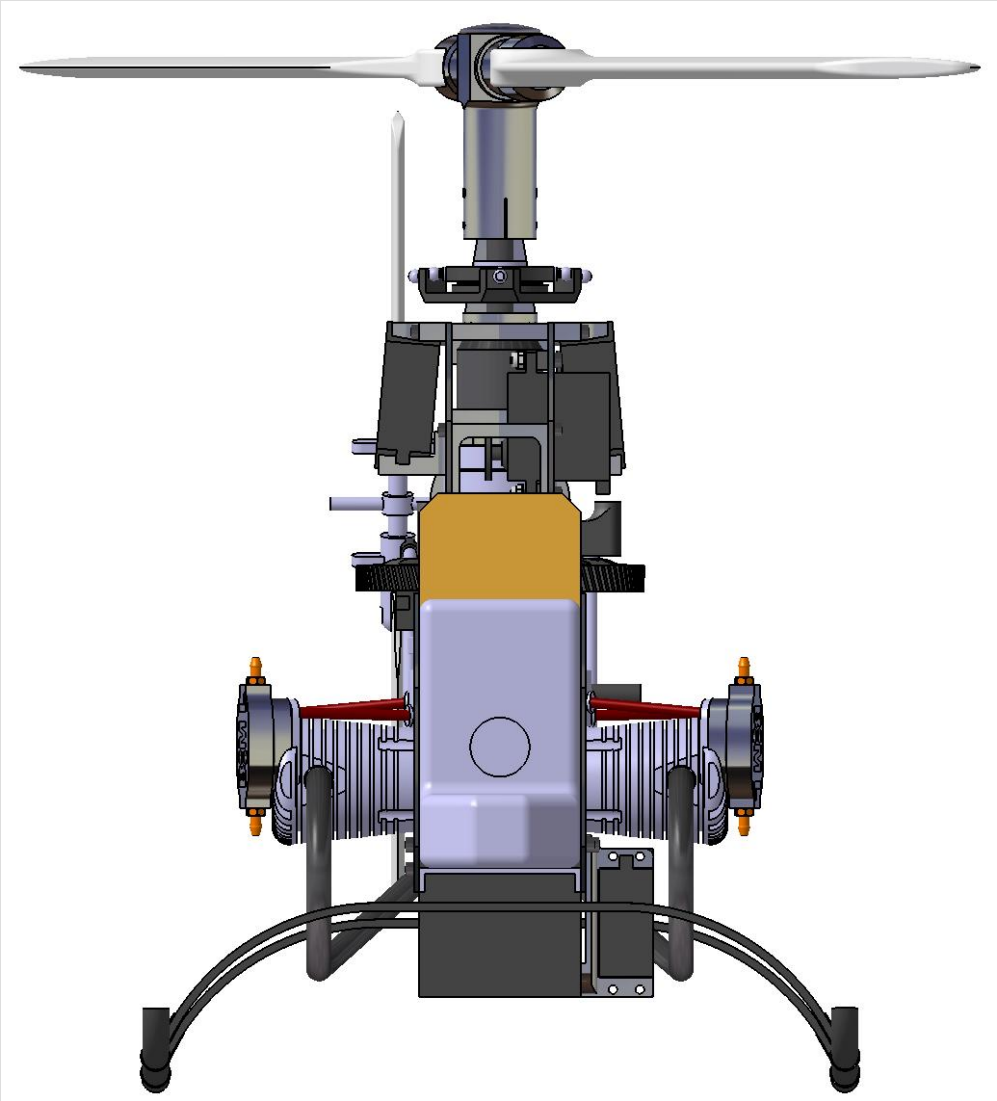

Current development of a high performance, hybrid power, helicopter

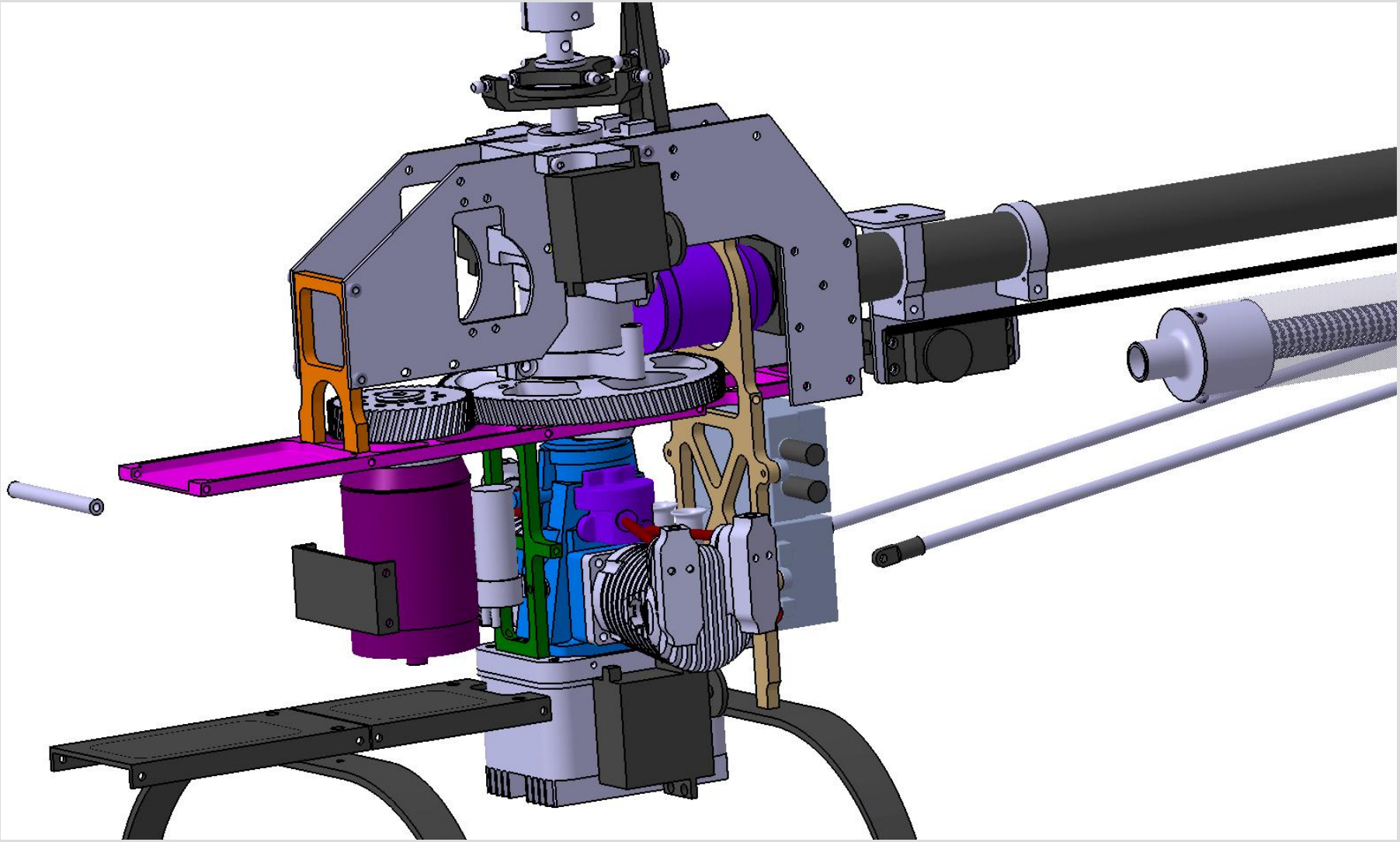

Prototype helicopter Flight Control Unit being tested on an electric helicopter

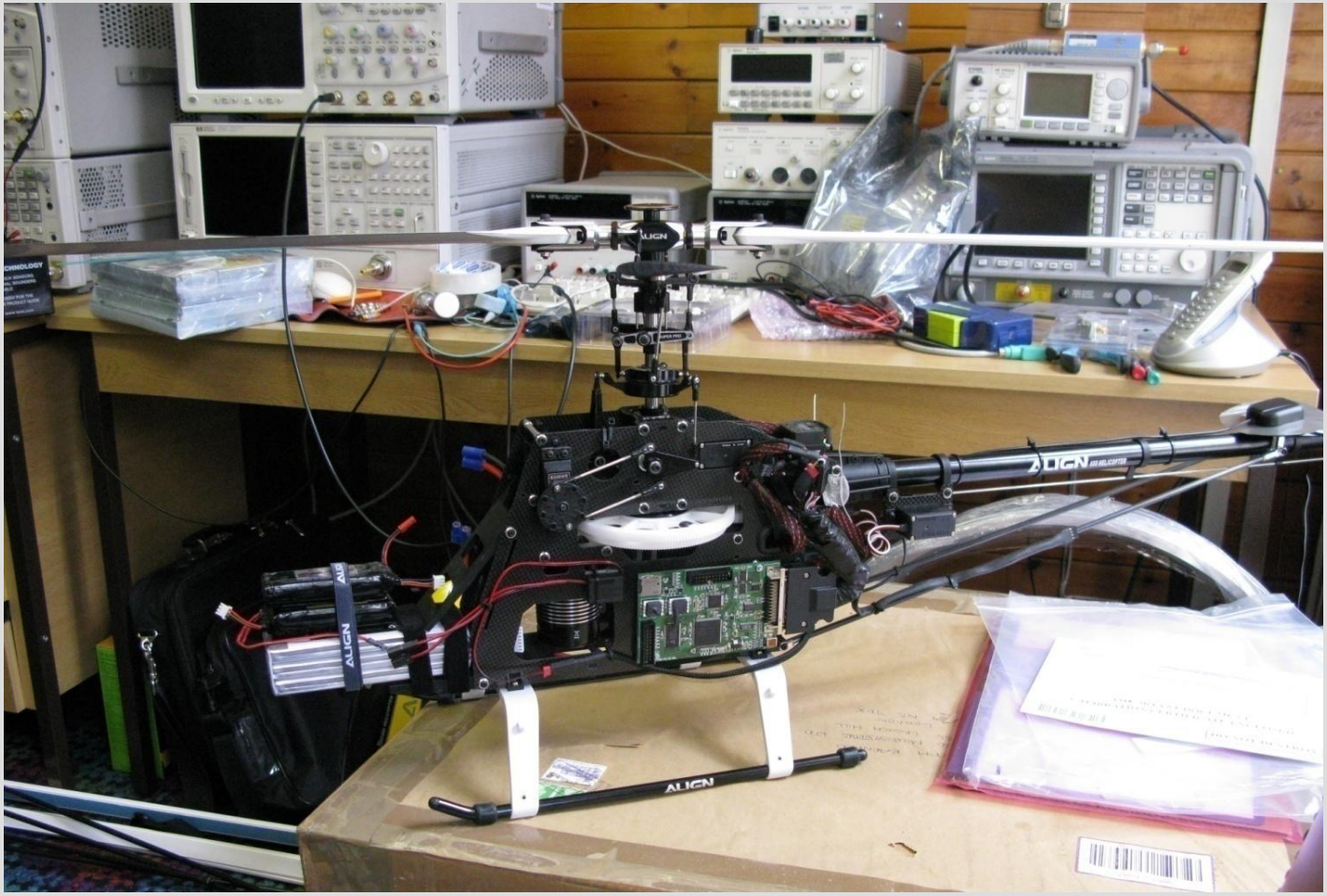

The Flight Control Unit has been developed for us by members of the Tumbleweed Team from the University of Manchester.

In conclusion, the UK MoD Grand Challenge 2008 was the catalyst for our development of:

a small helicopter with the following expected performance:

- electric start capability: the helicopter can fly and land in a remote location, for example, deposit a sensor and then leave at some later time;

- over 100 minutes of hover time;

- 9.4 kg payload;

- low payload vibration level of < 1G due to use of twin cylinder engine in boxer configuration

- is relatively quiet: due to use of four stroke engine and a very effective muffler;

To the best of our knowledge, one cannot currently purchase a small, unmanned, helicopter with the above capabilities anywhere in the world.

a small delta wing aircraft with the following characteristics:

- ability to fly in wet and gusty conditions

- basis for stealth technology: RADAR, visible, thermal and acoustic signature reduction

Acknowledgements

The UK Ministry of Defence for funding the Barnard Team preparations for the Grand Challenge

Andy Wallace and Ashton Radcliffe for supplying the video footage shown

The MoD DSTL, other MoD staff and the Grand Challenge Judges for their constructive comments throughout the MoD Grand Challenge.

Rob Frampton, Dennis Fryer, Dewar Donnithorne-Tait, Ken Lees, Marcel King and everyone who contributed comments, assistance and involvement in our work.